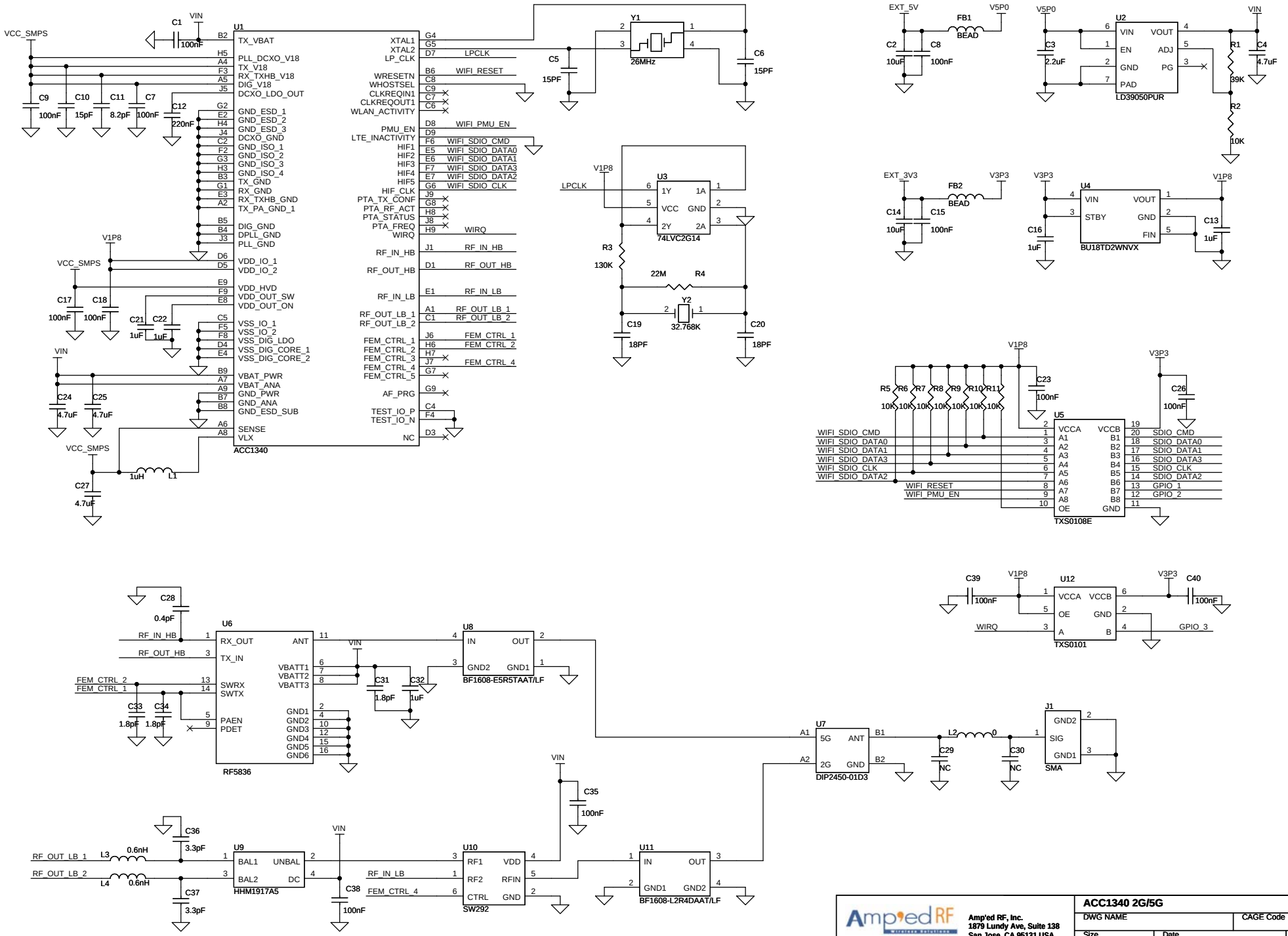

Amp'ed RF, Inc.
1879 Lundy Ave, Suite 138
San Jose, CA 95131 USA

ACC1340 2G/5G			
DWG NAME	CAGE Code		Rev 1.0
Size A3	Date	Sheet 1 of 1	